PUZZLEBOMB SOLUTIONS

SLEIGH TRACKS

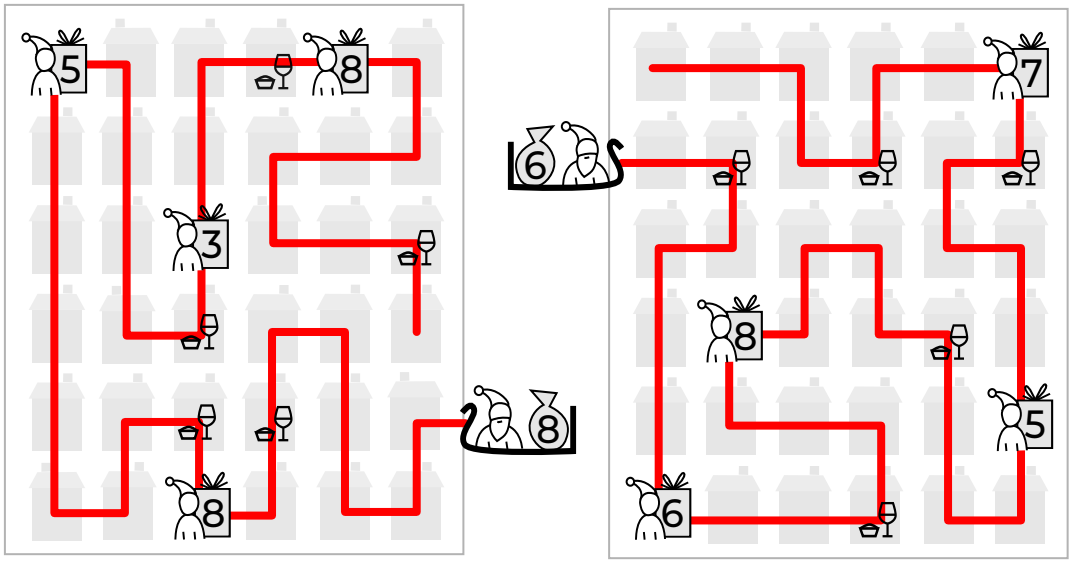

CRACKERS

FOR	K	FUL
CAM	E	LOT
REC	Y	CLE
CUR	R	ENT
DEC	I	MAL
BLE	N	DER
OUT	G	ROW

EIGHT EVENTS

VERNIX
= VIXEN + R

NON-RUDE
= DONNER + U

SHARDED
= DASHER + D

PEAR CORN
= PRANCER + O

TELCOM
= COMET + L

CARP END
= DANCER + P

HEINZ BLT
= BLITZEN + H

PC DUI
= CUPID